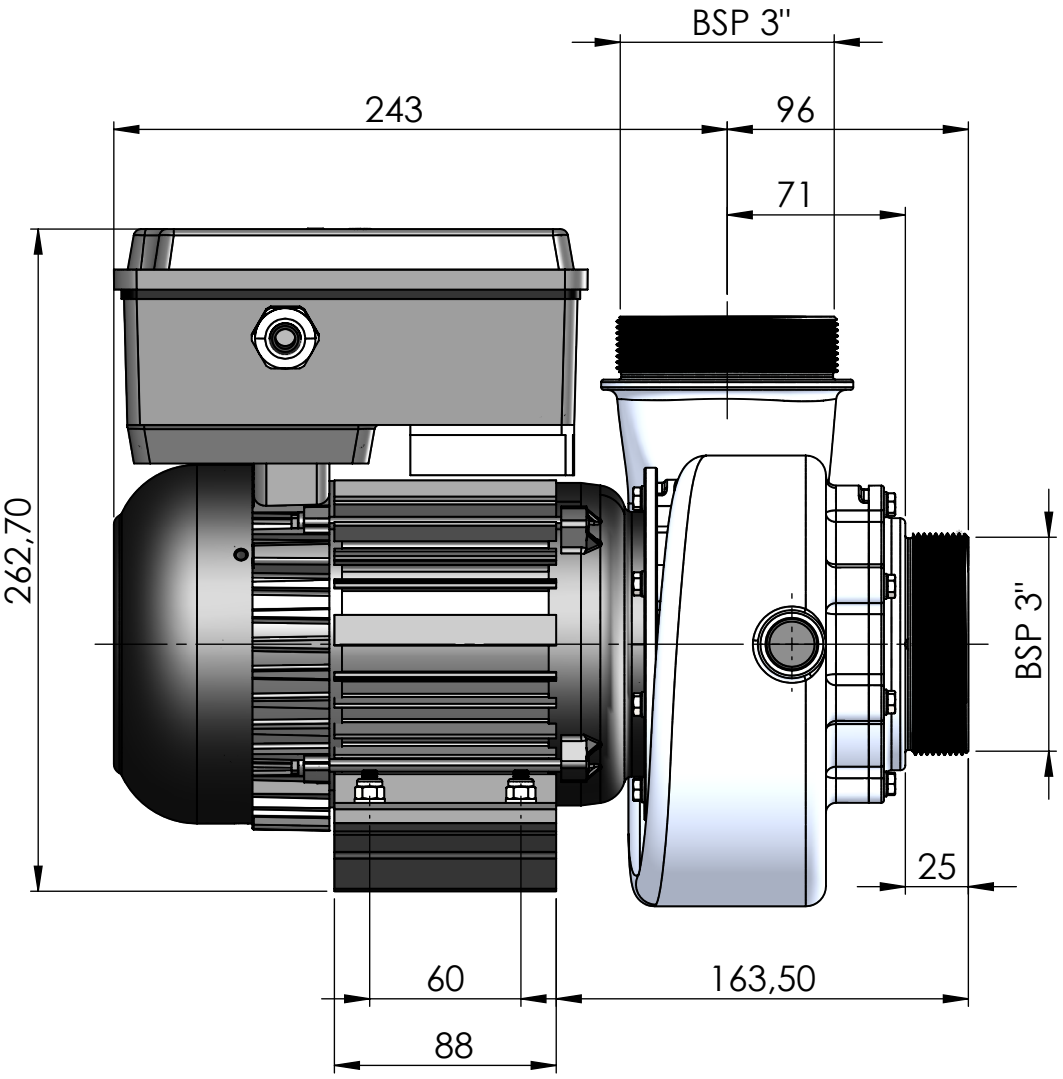
BSP 3"
243
96
71
262,70
BSP 3"
25
60
163,50
88

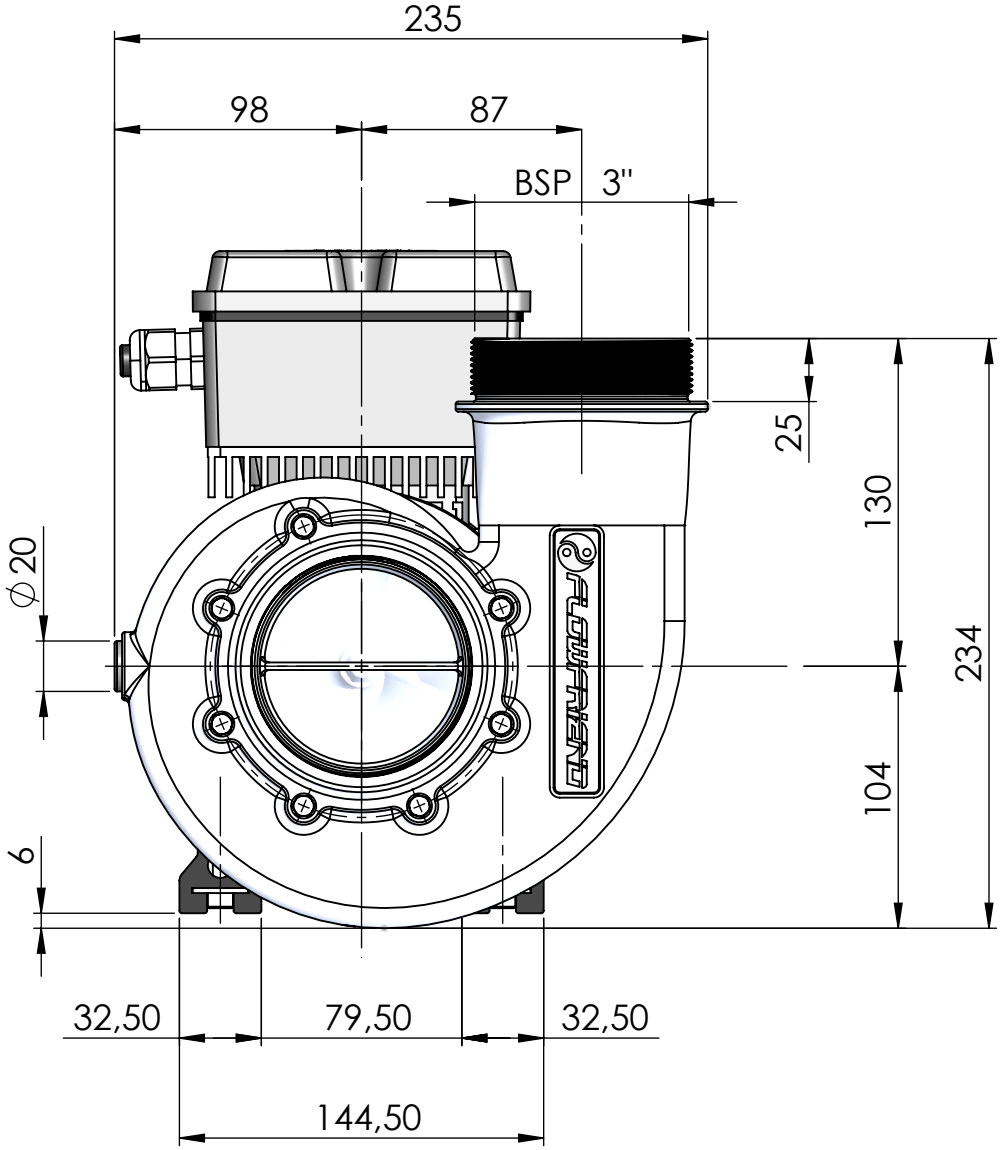
235
98
87
BSP 3"
25
130
234
104
⌀20
6
32,50
79,50
32,50
144,50